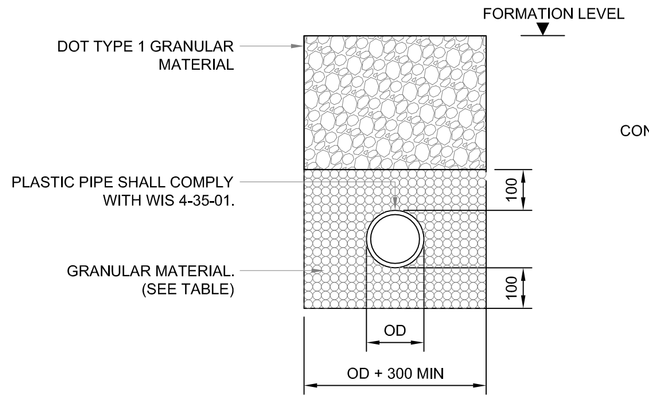

CLASS T DETAIL

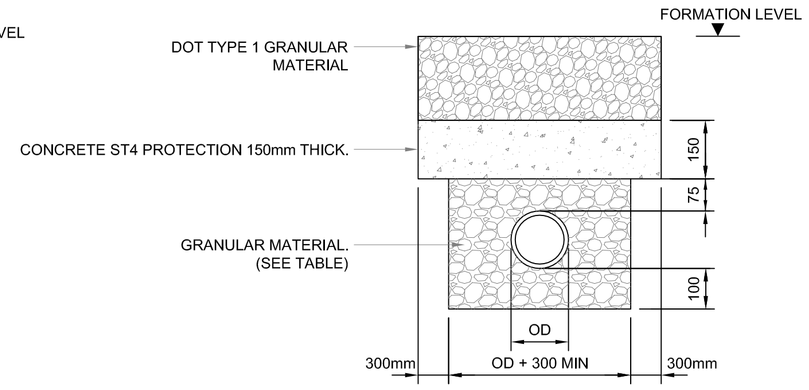

CLASS Q DETAIL

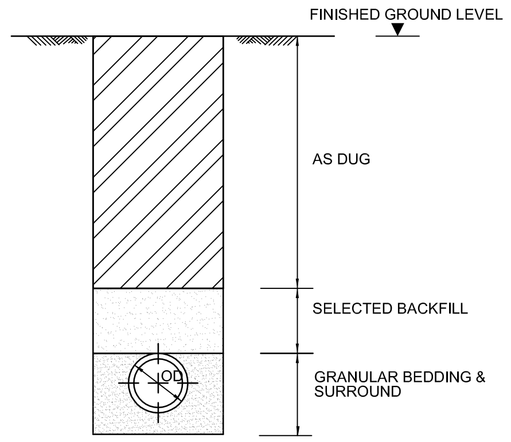

CLASS O DETAIL

(PLASTIC PIPES SHALL COMPLY WITH WIS 4-35-01 AND SHALL BE KITEMARKED)

NOMINAL PIPE DIA (mm)	SINGLE SIZED (mm)	GRADED (mm)
100	10	NOT PERMITTED
110 TO 150	10 OR 14	14 TO 5 GRADED
160 TO 300	10, 14 OR 20	EITHER 20 TO 5 GRADED OR 14 TO 5 GRADED
310 TO 500	14 OR 20	EITHER 20 TO 5 GRADED OR 14 TO 5 GRADED
OVER 550	14, 20 OR 40	EITHER 40 TO 5 GRADED 20 TO 5 GRADED OR 14 TO 5 GRADED

GRANULAR BEDDING MATERIAL
EXTRACT TABLE FROM A2 WIS 4-08-02
(ALL AGGREGATES TO TABLE 4 OF BS 882 :1983)

MINIMUM RECOMMENDED TRENCH WIDTHS FOR PIPES IN POOR GROUND CONDITIONS	
NOM. PIPE DIA (mm)	MIN TRENCH WIDTH (mm)
150	450
225	525
300 AND ABOVE	TWO TIMES NOM. DIAMETER

THE FOLLOWING UPVC PIPES ARE ACCEPTABLE FOR USE	
UPONOR ULTRA DRAIN	110 & 160 (O.D.)
HEPWORTH PLASTIDRAIN	110 & 160 (O.D.)
WAVIN OSMA DRAIN	110 & 160 (O.D.)
WAVIN OSMA ULTRA RIB	150 & 225 (I.D.)
MARLEY SOLID WALL	110 & 160 (O.D.)
MARLEY QUANTUM	150 & 225 (I.D.)
POLYPIPE RIDGISEWER	150 & 225 (I.D.)
POLYPIPE UNDERGROUND DRAIN	110 & 160 (O.D.)

BEDDING & BACKFILL SPECIFICATIONS

PEDESTRIAN AREAS:-

FLEXIBLE PIPEWORK (UPVC) -
- WITH COVER TO SOFFIT > 0.9m - CLASS T
- WITH COVER TO SOFFIT < 0.9m - CLASS Q

VEHICULAR AREAS:-

FLEXIBLE PIPEWORK (UPVC) -
- WITH COVER TO SOFFIT > 1.2m - CLASS T
-WITH COVER TO SOFFIT < 1.2m - CLASS Q

LANDSCAPING AREAS:-

FLEXIBLE PIPEWORK (UPVC) - CLASS O

PLASTIC PIPE (UPVC) TRENCH BEDDING DETAILS
SCALE 1:20

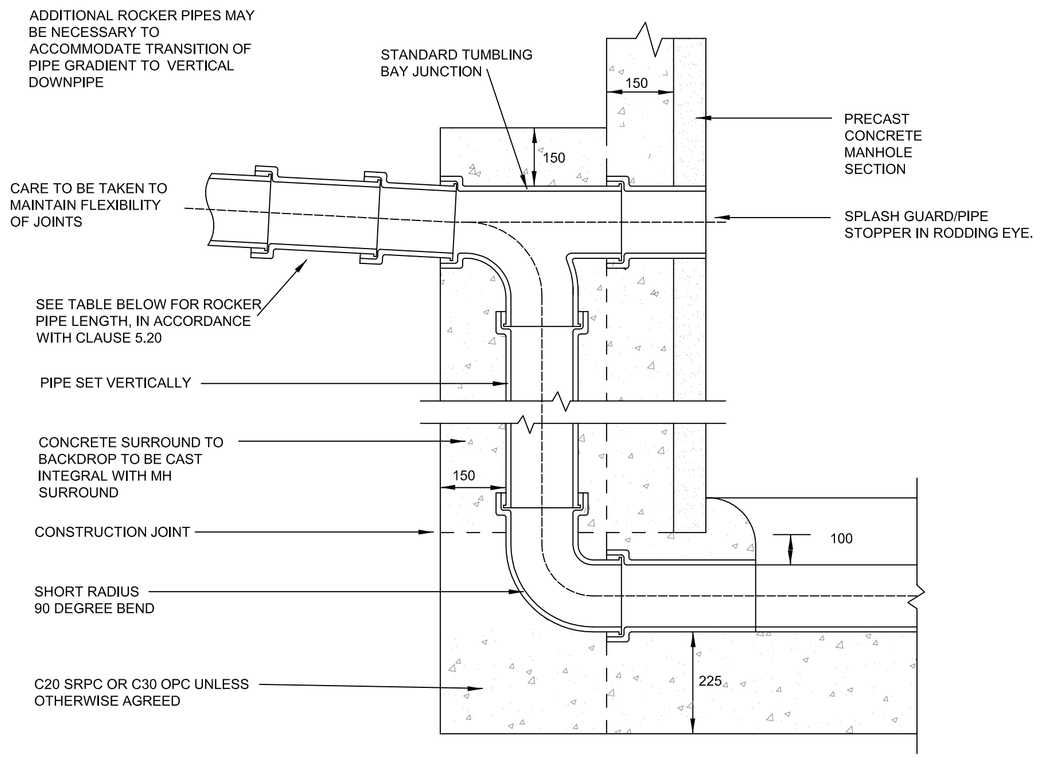

Note: Where the drop is not excessive a 45 degree drop pipe may be used

TYPICAL VERTICAL BACKDROP DETAIL
SCALE 1:10

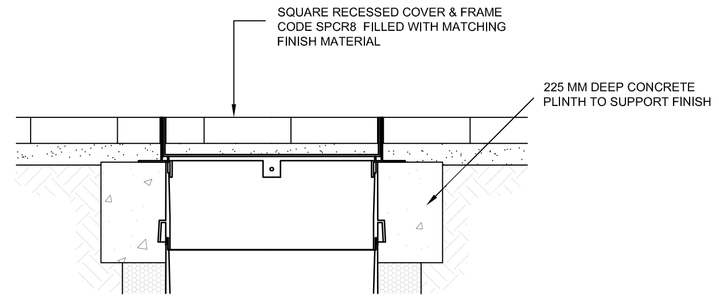

SITED IN DRIVEWAYS / HARD LANDSCAPED AREAS WITH RECESSED COVER

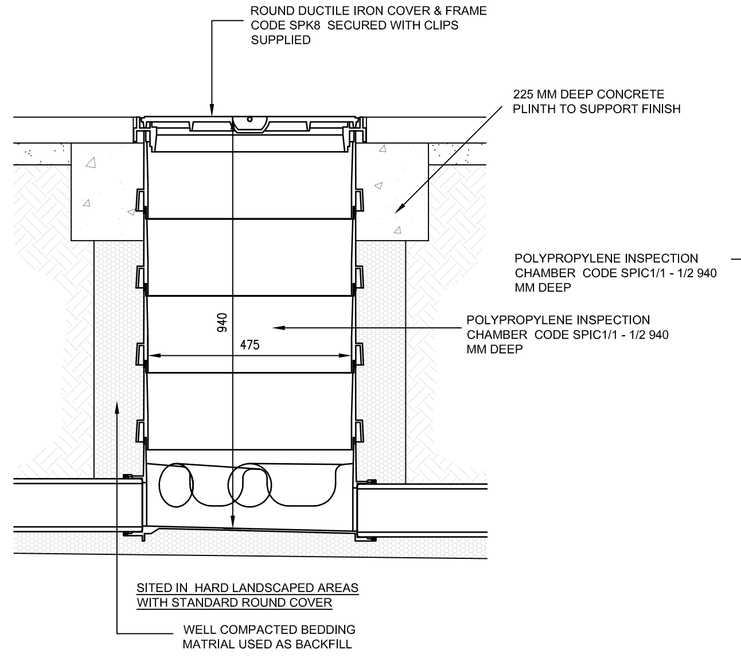

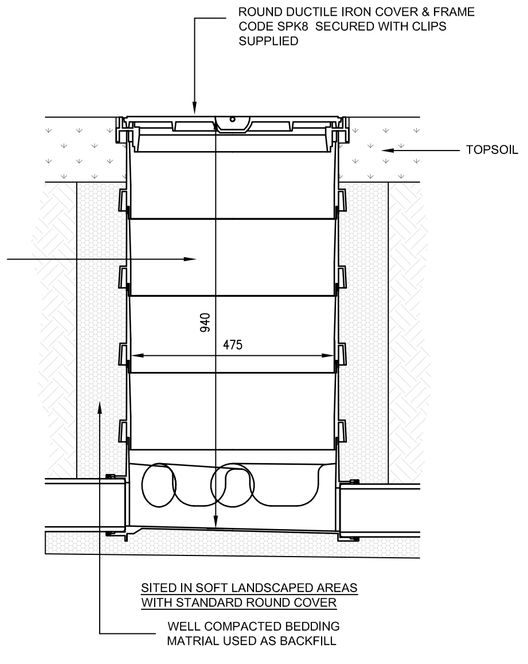

POLYPROPYLENE INSPECTION CHAMBER
SCALE 1:10

1015049 | A1

Based on.

Architects Drg No.	Rev
Structural Drg No.	Rev
Survey Drg No.	Rev
Other Drg No.	Rev
Other Drg No.	Rev

DO NOT SCALE FROM THIS DRAWING

Notes

1. DRAWING TO BE READ IN CONJUNCTION WITH PROPOSED DRAINAGE LAYOUT DRAWING CLXX(52)4001.

Issue	Date	Description	By	Chkd	Verfd
A	16/03/18	ISSUED FOR TENDER	CA	AF	LF

Project
EAST BOLDON

Client
GENTOO HOMES

Architect
GENTOO HOMES

Title
DRAINAGE DETAILS SHEET 3

Drawing No.	Drawing Status
CLXX(52)5003	TENDER
Job No. 1015049	Scale AS SHOWN

Originator	Checked	Verified	Issue.
CA	AF	LF	A

CUNDALL
4th Floor, Partnership House
Regent Farm Road,
Gosforth,
Newcastle NE3 3AF
Telephone: +44 (0)191 213 1515
Website: www.cundall.com

© Copyright Cundall 2010